PRODUCT NAME：鱼眼镜头

1. SPECIFICATION ：

1.SENSOR SIZE		1/3
2.FOCAL LENGTH (EFL)	f=	1.2 mm
3.F/NO (Infinite)	F/NO=	1.8
4.BACK FOCAL LENGTH	BFL=	2.85 mm
5.FLANGE BACK LENGTH	FB=	2.35 mm
6.FIELD OF VIEW (Diagonal By Sensor)	=	D200°
(Horizontal)	=	H200°
(Vertical)	=	V180°
7.OPTICAL DISTORTION	<	−115%
8.Thread Size	=	M12XP0.5
9.Element	=	6G+IR

10.IR FILTER SPEC.(Bulit−in,Others available)
Tavg>=88% @ 440−620 nm
T=50% @ 648?10 nm
Tavg<=3% @ 700−1000 nm
T<5% @ 1050 nm

2. OPTICAL LAYOUT ：

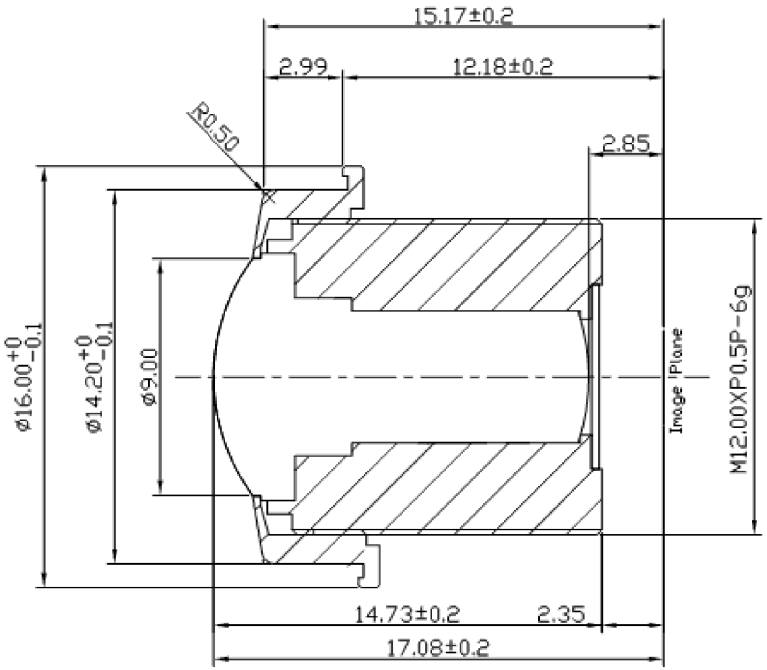

STANDARD TOLERANCE RANGE UNLESS OTHER SPECIFIED		
RANGE	TOLERANCE DIM	TOLERANCE ANGULAR
X.XXXX	±0.001	
X.XXX	±0.01	
X.XX	±0.05	±0.2°
X.X	±0.1	±0.5°
X.	±0.2	±1.0°

NAME	鱼眼镜头			SCALE		DRAWN	
VIEW		REV	TS01	DATE		CHECKED	
				BORDER		APPROVED	